IPC-6606/6608

6/8-Slot Desktop/Wallmount Chassis

Features

- Support 6/8-slot PICMG 1.0 backplane
- Shockproof drive bay for 5.25" ODD and 3.5" HDD
- Two front access USB ports
- Bidirectional to mount chassis on wall or workbench
- Easy maintain system fan and filter

Specifications

Model Name		IPC-6606	IPC-6608
Drive Bay	5.25"	1	2
	3.5"	2 (1 front-accessible, 1 internal)	1
Front I/O Interface	USB 2.0	2	2
Cooling	Fan	1 (9 cm / 53 CFM)	1 (12 cm / 85 CFM)
	Air Filter	Yes	
Miscellaneous	LED Indicators	Power and HDD	
	Control	Power switch and reset button	
Environment	Temperature	0 ~ 40° C (32 ~ 104° F), operating	
	Humidity	10 ~ 85% @ 40° C, non-condensing	
Physical Characteristics	Dimensions (W x H x D)	173 x 254 x 396 mm (6.8" x 10" x 15.6")	173 x 315 x 410 mm (6.8" x 12.4" x 16.1")
	Weight	9 kg (19.8 lb)	11 kg (24.2 lb)

Front View

IPC-6606

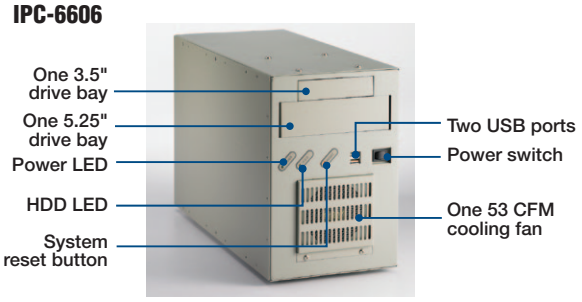

Inside View

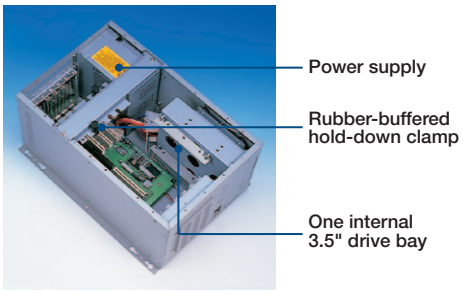

IPC-6608

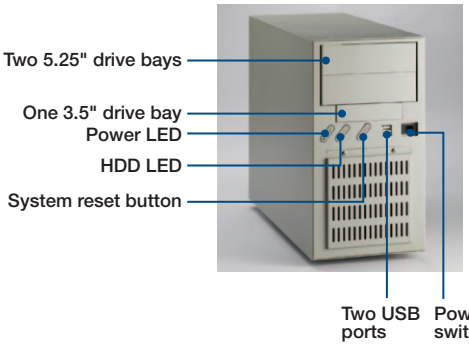

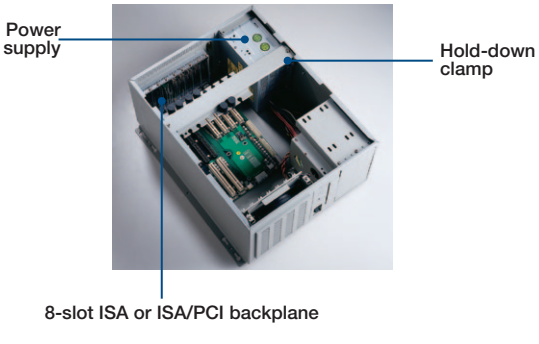

All product specifications are subject to change without notice

Dimensions

Unit: mm [inch]

IPC-6606

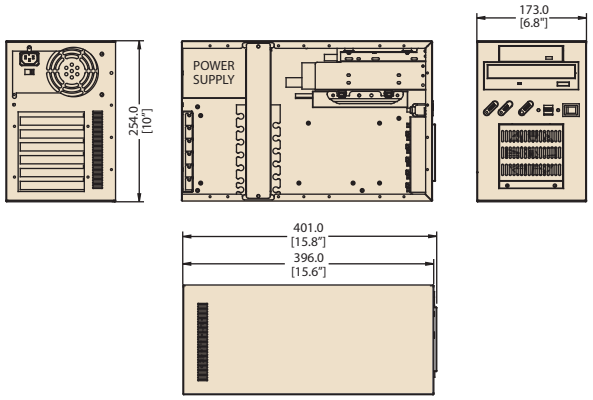

IPC-6608

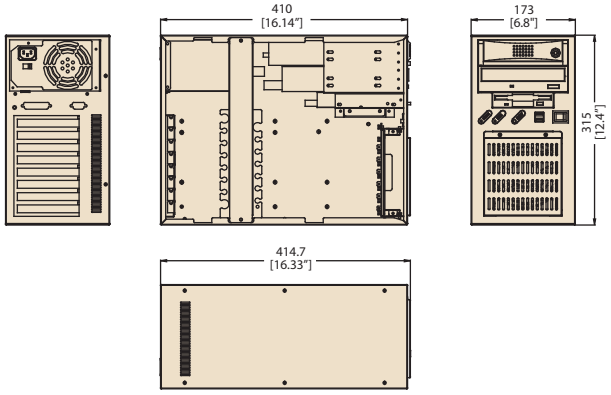

Installation

Unit: mm [inch]

IPC-6606

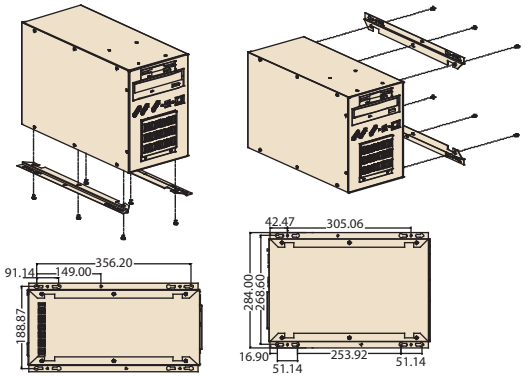

Bidirectional mounting

IPC-6608

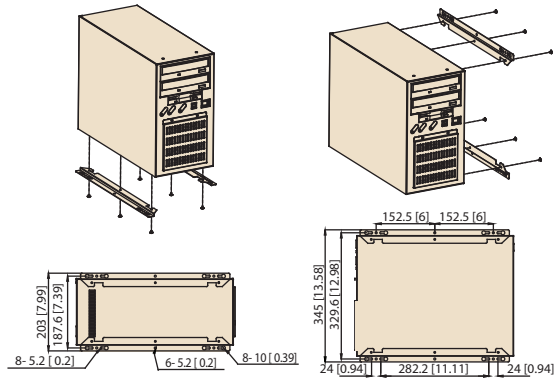

Ordering Information

Part Number	Power Supply	Backplane	Switch
IPC-6606			
IPC-6606BP-00XE	-	-	AT/ATX
IPC-6606P3-25BE	96PS-A250WPS2	PCA-6106P3-0D2E	AT
IPC-6606P3-30CE	96PS-A300WPS2	PCA-6106P3-0D2E	ATX
IPC-6608			
IPC-6608BP-00E	-	-	AT/ATX
IPC-6608BP-25BE	96PS-A250WPS2		ATX
IPC-6608BP-30CE	96PS-A300WPS2		ATX

Power Supply Options

(For detailed power supply specs, please Refer to Chapter 12)

Part Number	Specifications	
	Watts	Input
PS8-250ATX-ZE (ATX, PFC)	250W	AC 100 ~ 240 V (full-range)
PS8-300ATX-ZBE (ATX, PFC)	300W	AC 100 ~ 240 V (full-range)
PS8-400ATX-ZE (ATX, PFC)	400W	AC 100 ~ 240 V (full-range)

Optional Accessories

Part Number	Description
IDT-3120E	Mobile rack for converting a 3.5" drive bay to dual 2.5" SATA HDD trays
IDT-5230E	Mobile rack for converting dual 5.25" drive bays to three 3.5" SAS/SATA HDD trays